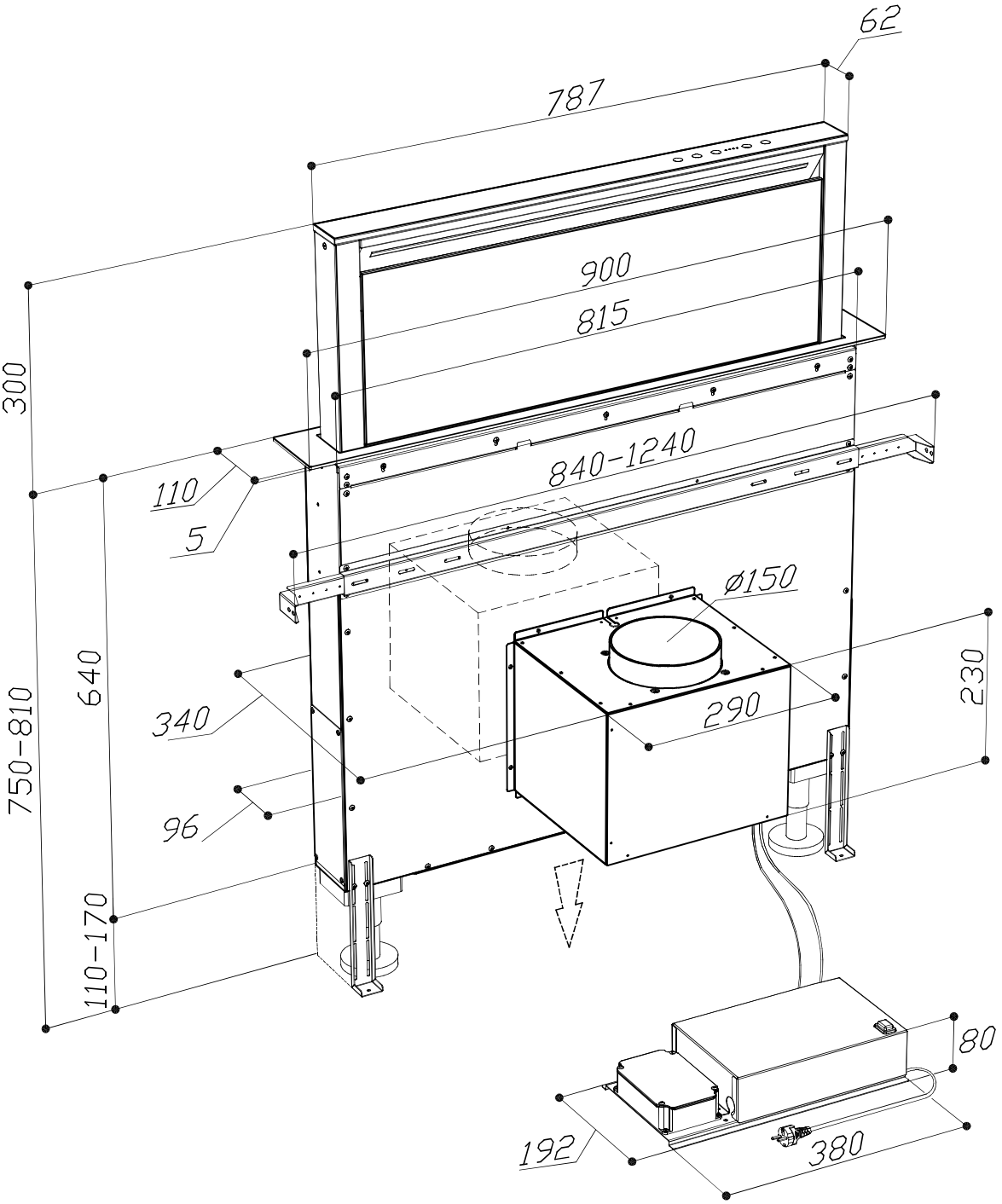
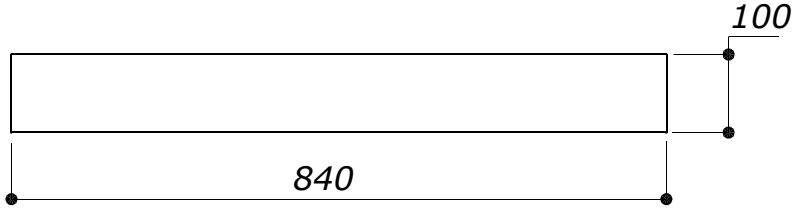
Rectangular opening: 100x840 (mm)